Rev.	Mark	Description	Date

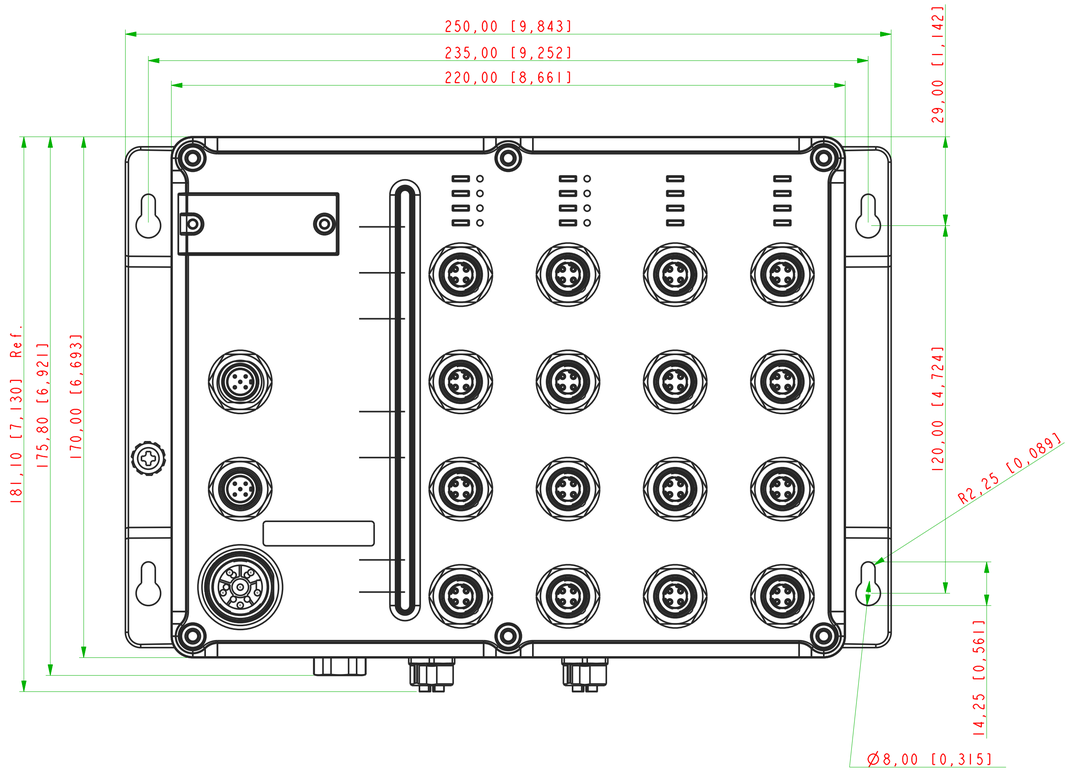

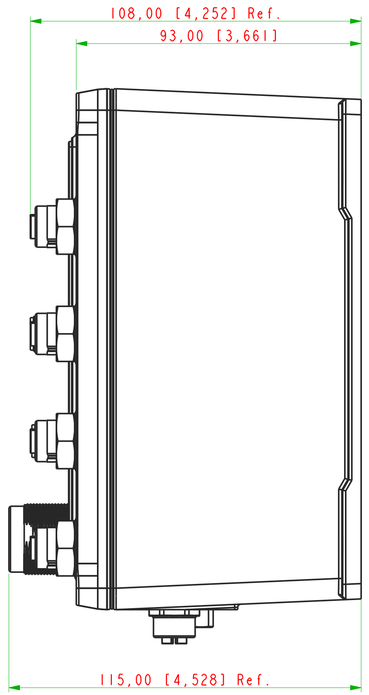

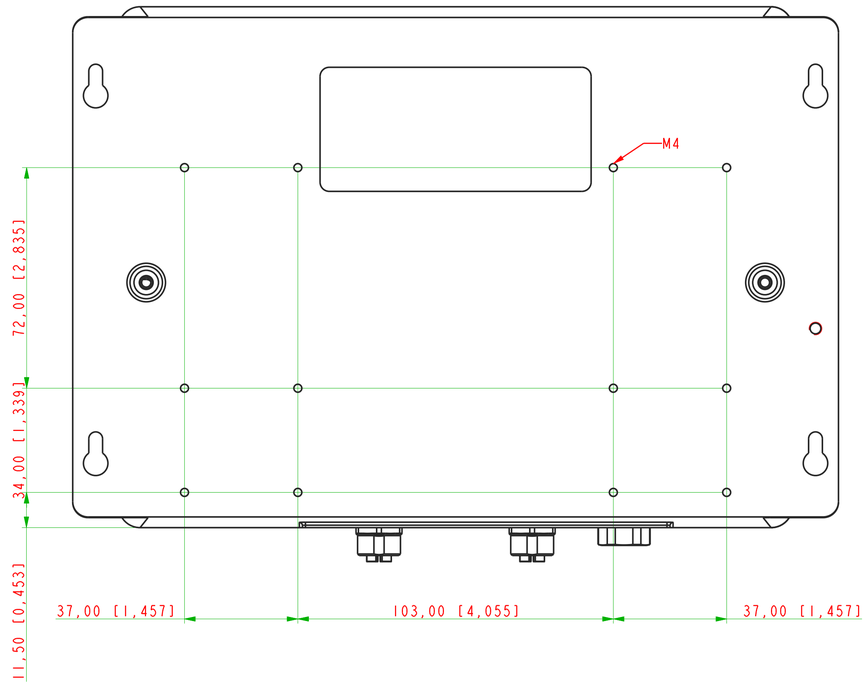

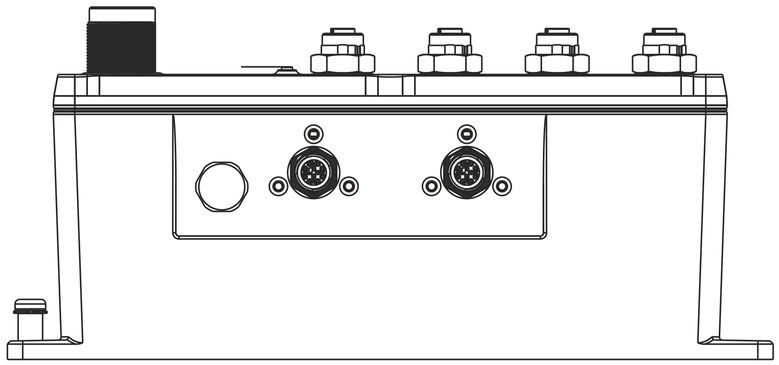

Specified Tolerance			
Length	Class 1	Class 2	Class 3
0.5~6	±0.05	±0.1	±0.15
6~30	±0.1	±0.2	±0.25
30~120	±0.2	±0.3	±0.35
120~315	±0.3	±0.5	±0.55
315~1000	±0.5	±0.7	±0.9

MOXA®
Tel:+886-2-89191230
Fax:+886-2-89191231
www.moxa.com

Designer	Porjection	Unit	mm	Tolerance	Class I	Product Model	XXXX-XX-XX	Frame	A1
XXXXX	3rd Angle	Scale	1 : X	Material	TBD	Drawn Name	2D_TN-5518A-2GTX-8POE		
		Date	17-05-23	File Name	TN-5518A-8POE	Product No.	0000000000000	Ver.	1.0